# D 24 Volt DC Motor Specifications

### Standard (Single Shaft)

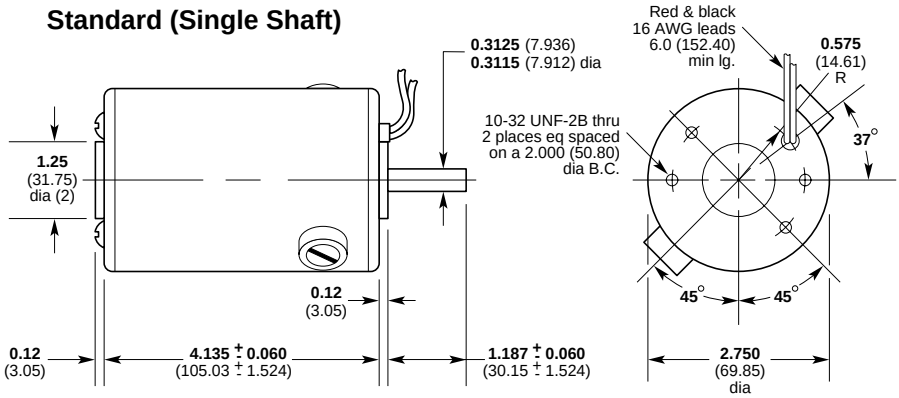


### Inline (Double Shaft)

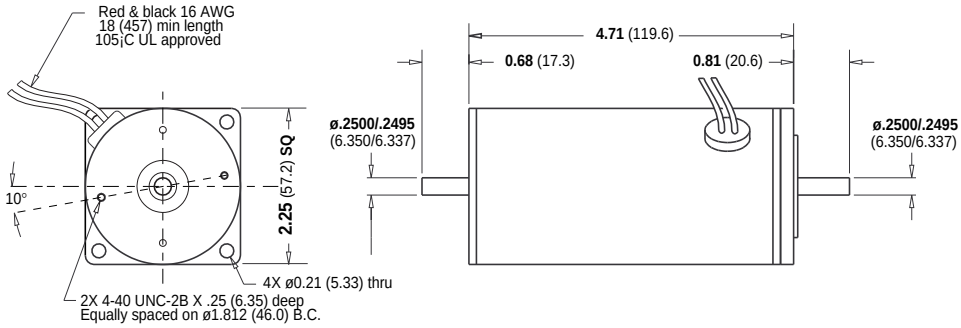


## Electrical Data

| | | |
|---|---|---|
| Rated Voltage | V | 24 |
| Max. Continuous Current | A | 4.5 |
| Max. Operating Voltage | V | 36 |
| Inductance | mH | 2.0 |
| $K_t$ Torque Constant (± 10%) | oz-in/A [N-m/A] | 8.9 [0.062] |
| $K_v$ Voltage Constant (± 10%) | V/kRPM | 6.5 |
| Winding Resistance @ Ambient | Ohms | 1.0 |

## Mechanical Data

| | | |
|---|---|---|
| Continuous Stall Torque | oz-in [N-m] | 40 [0.28] |
| No-load Speed at Rated Voltage | RPM | 3600 |
| No-load Current | A | 0.5 |
| Rotor Inertia | oz-in-s$^2$ [kg-cm$^2$] | 0.018 [1.3] |
| Max. Winding Temperature | °F [°C] | 180 [82] |
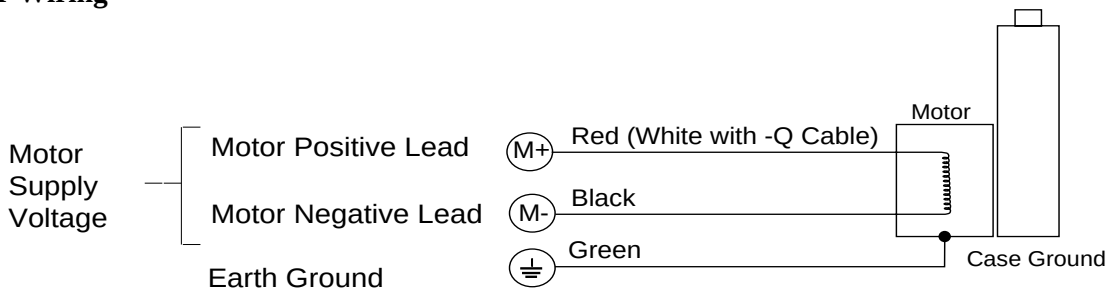
## Motor Wiring